Modular Furniture Technical Datasheet

DATE: NOVEMBER 2026
REVISION: REV 4

FURNITURE LAYOUT EXAMPLES

Tables can be configured with any seat size in any configuration

Seat shown with seat accessories

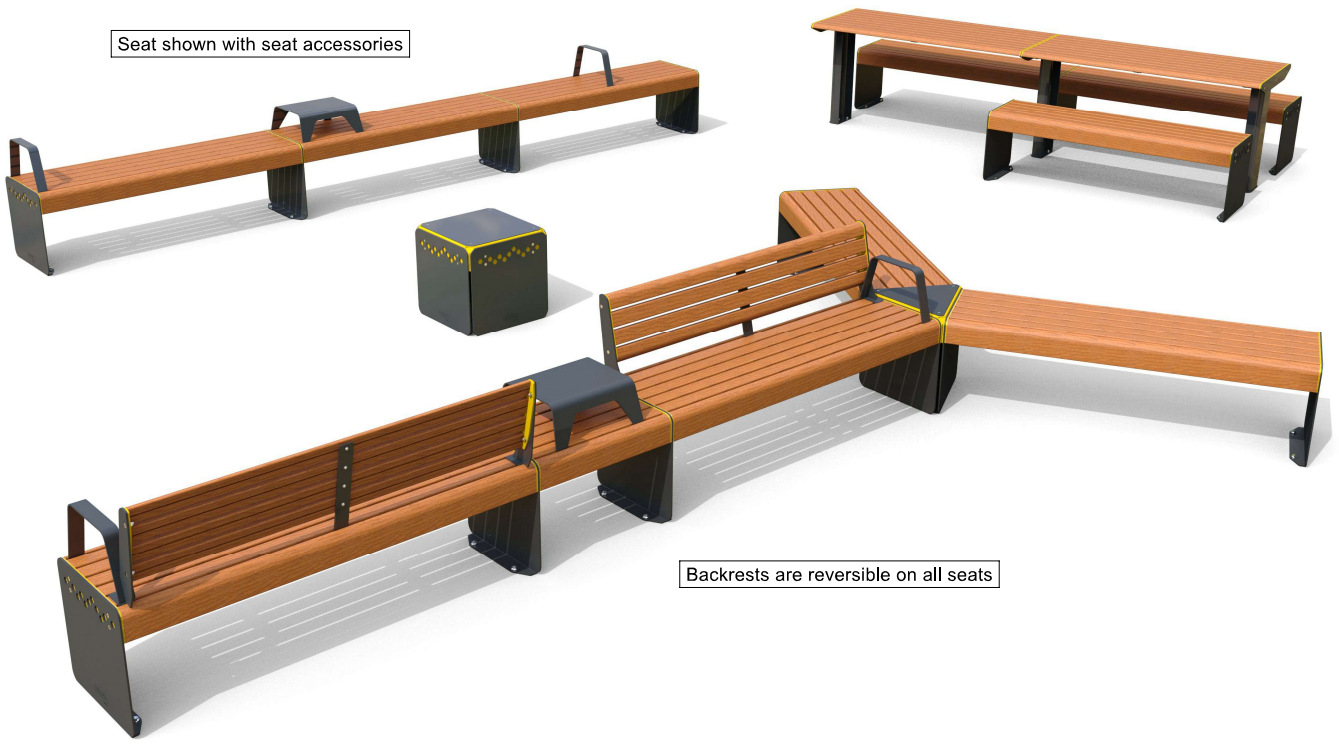

Backrests are reversible on all seats



Bar stools are available with or without backrests

Product Specifications:

Modular, surface-mounted seating and table solution
Highly durable fully enclosed aluminium or Timber Image slats
Sleek alloy frames ensure durability
All stainless steel anti-theft fixings supplied

Colour Specifications:

Choice of Slat Colour - Plain Anodised | Powder Coated | Timber Image
Choice of Primary Colour - Powder Coated | Applies to Legs, Decorative panels, Coffee Tables and Armrests
Choice of Secondary Colour - Powder Coated | Applies to all internal panels

Recommended Concrete Slab

Standard slab: 100 mm thick and extending 500 mm beyond the product footprint on all sides. All-access slab: 100 mm thick and extending 1000 mm beyond the product footprint on all sides.

To build your own HYVE Furniture System, go to www.gxoutdoors.com/hyve or contact one of our friendly sales team.

gxoutdoors.com/hyve
1300 552 102

COPYRIGHT © THIS DRAWING IS THE PROPERTY OF GX OUTDOORS PTY LTD FOR WHICH WE RESERVE ALL RIGHTS INCLUDING THOSE RELATING TO PATENTS OR REGISTERED DESIGNS.

Modular Furniture Technical Datasheet

DATE: NOVEMBER 2026
REVISION: REV 4

SEATS

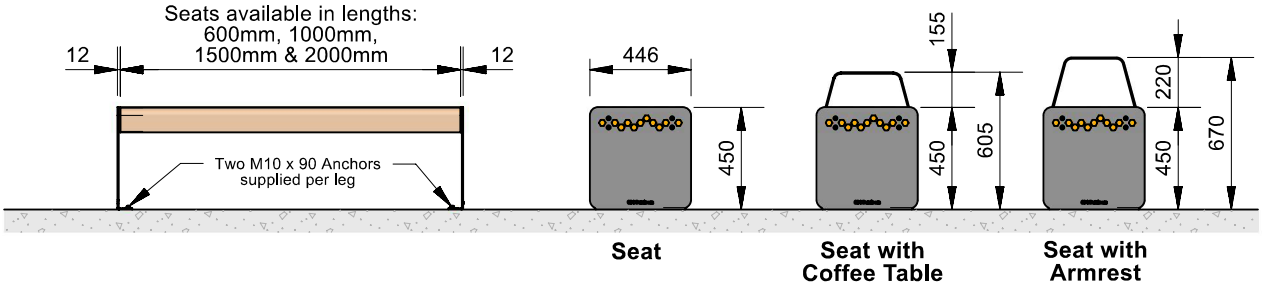

SEATS WITH BACKREST

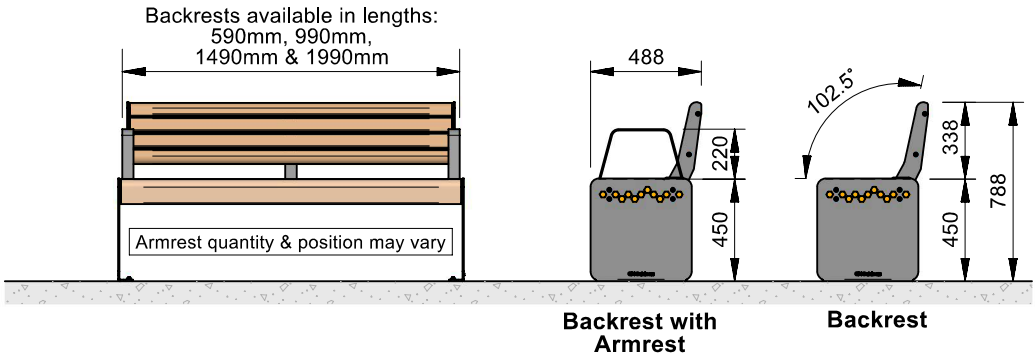

SEAT LAYOUT

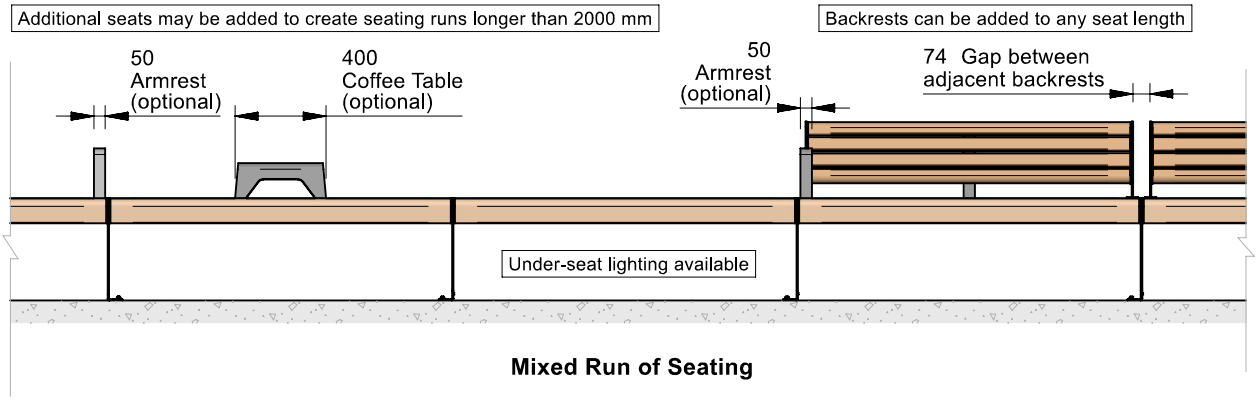



COPYRIGHT © THIS DRAWING IS THE PROPERTY OF GX OUTDOORS PTY LTD FOR WHICH WE RESERVE ALL RIGHTS INCLUDING THOSE RELATING TO PATENTS OR REGISTERED DESIGNS.

Modular Furniture Technical Datasheet

DATE: NOVEMBER 2026
REVISION: REV 4

STANDARD HEIGHT TABLES WITH SEATS

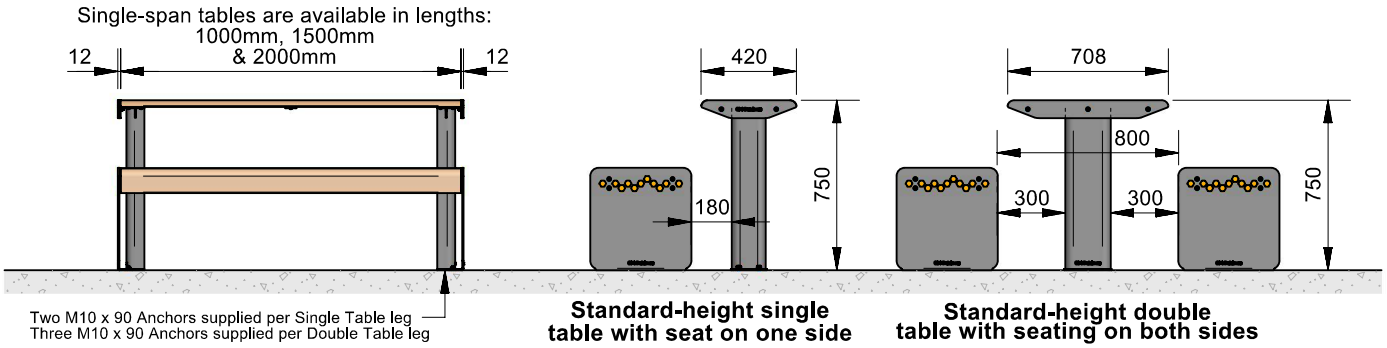

Standard-height single table with seat on one side

Standard-height double table with seating on both sides

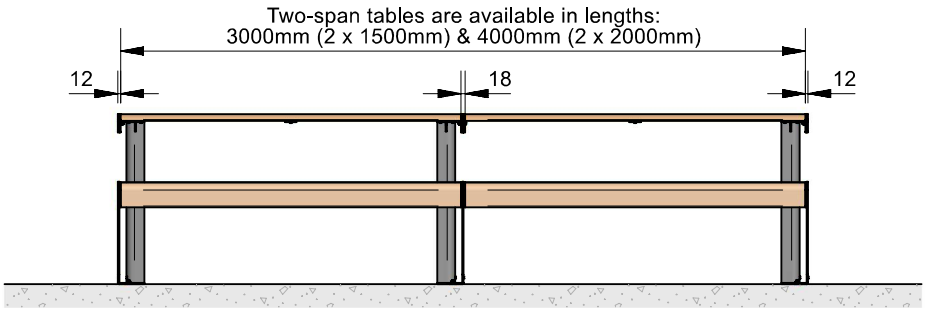

Two-span standard-height table

Longer table lengths available on request

BAR HEIGHT TABLES WITH STOOLS

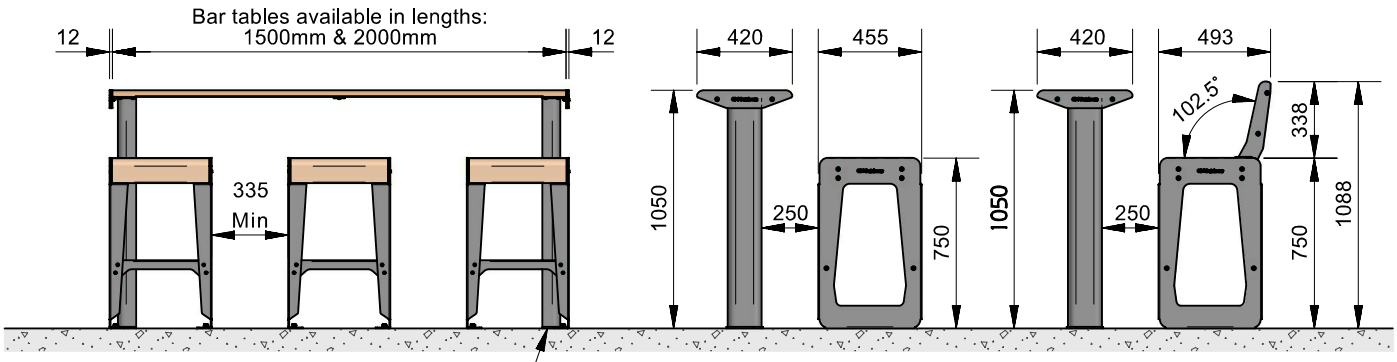

Bar-height table with stool (no backrest)

Bar-height table with stool (with backrest)

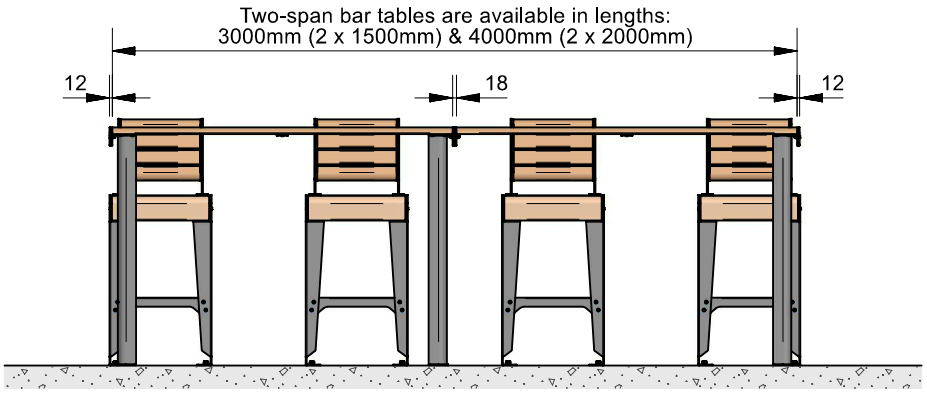

Two-span bar-height table (3000mm configuration shown)

Longer table lengths available on request

Seating positions by bar-table length: (Minimum clear gap between stools: 335mm)

1500mm Bar Table - 2 seating positions
2000mm Bar Table - 3 seating positions
3000mm Bar Table (2 x 1500mm) - 4 seating positions
4000mm Bar Table (2 x 2000mm) - 5 seating positions

COPYRIGHT © THIS DRAWING IS THE PROPERTY OF GX OUTDOORS PTY LTD FOR WHICH WE RESERVE ALL RIGHTS INCLUDING THOSE RELATING TO PATENTS OR REGISTERED DESIGNS.

Modular Furniture Technical Datasheet

DATE: NOVEMBER 2026
REVISION: REV 4

45° CONNECTOR

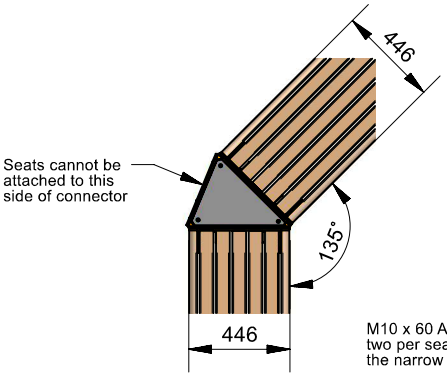

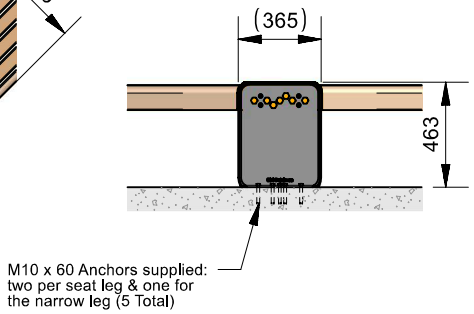

Stand-alone Connector | Connector with seats

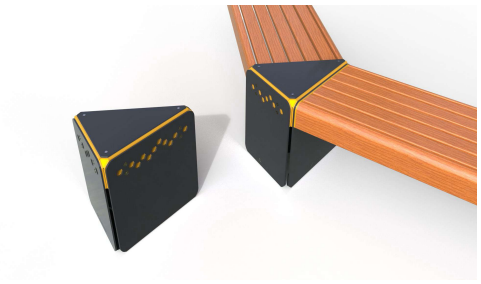

60° CONNECTOR

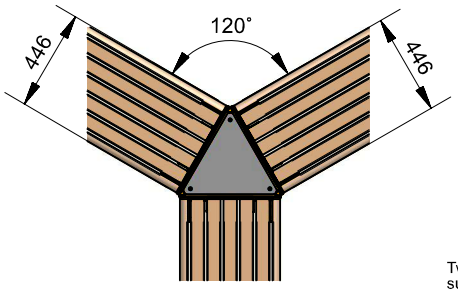

Seats may be connected to any side

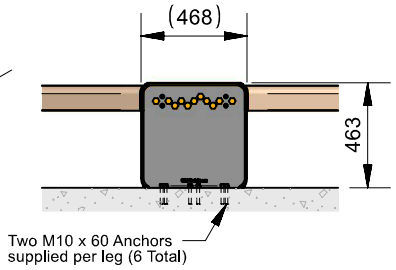

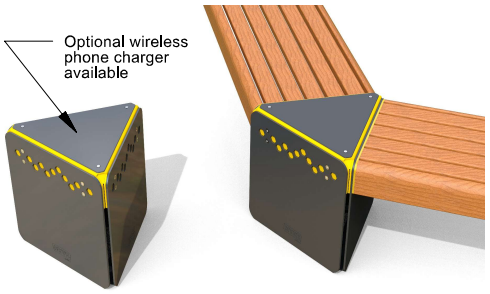

90° CONNECTOR

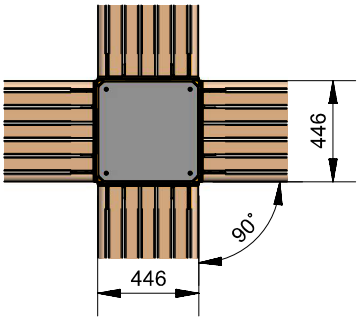

Seats may be connected to any side

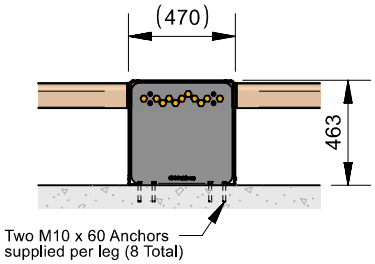

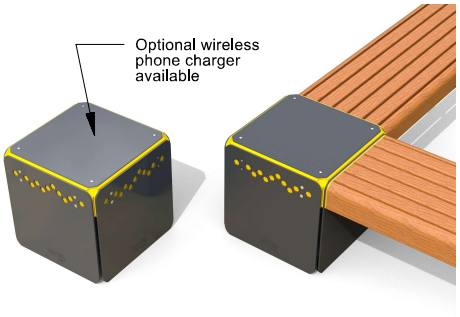



Wireless charger available only with 60° & 90° connectors

COPYRIGHT © THIS DRAWING IS THE PROPERTY OF GX OUTDOORS PTY LTD FOR WHICH WE RESERVE ALL RIGHTS INCLUDING THOSE RELATING TO PATENTS OR REGISTERED DESIGNS.

Modular Furniture Technical Datasheet

DATE: NOVEMBER 2026
REVISION: REV 4

HYVE BY GX Outdoors

All Joiners must have a seat connected both ends

Joiners with seats

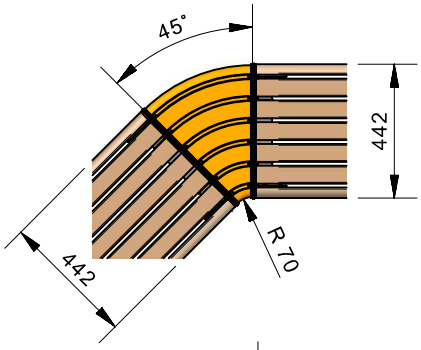

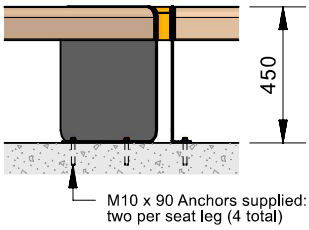

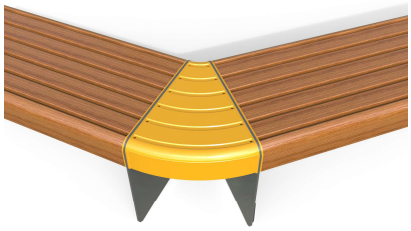

45° JOINER

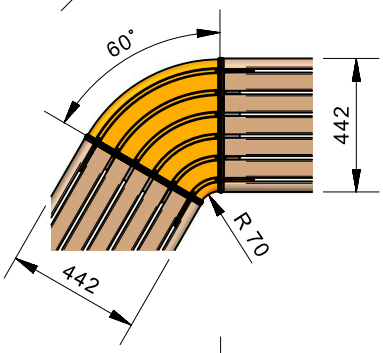

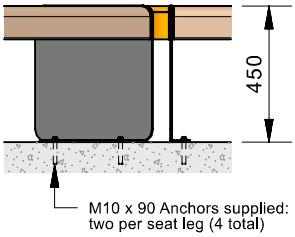

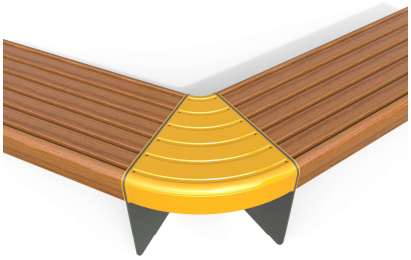

60° JOINER

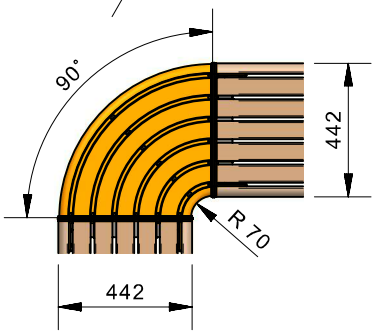

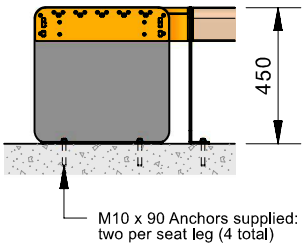



90° JOINER

2 x 90 Degree Joiners

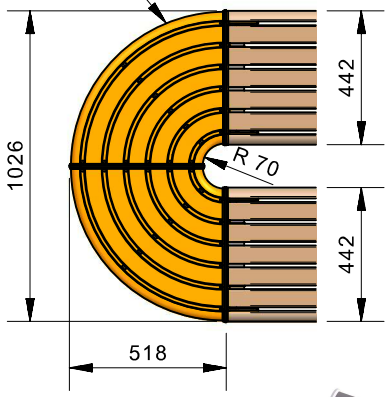

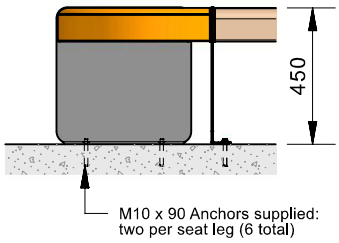

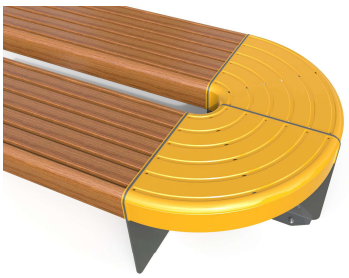

180° JOINER

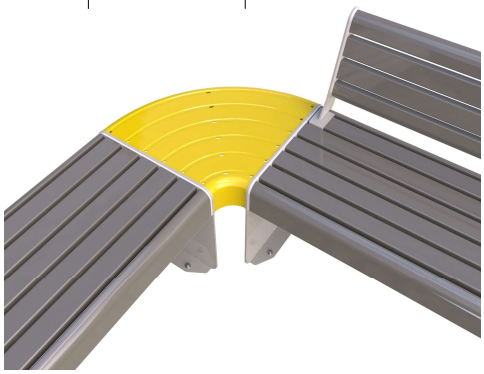

90° Joiner between a bench seat and park seat

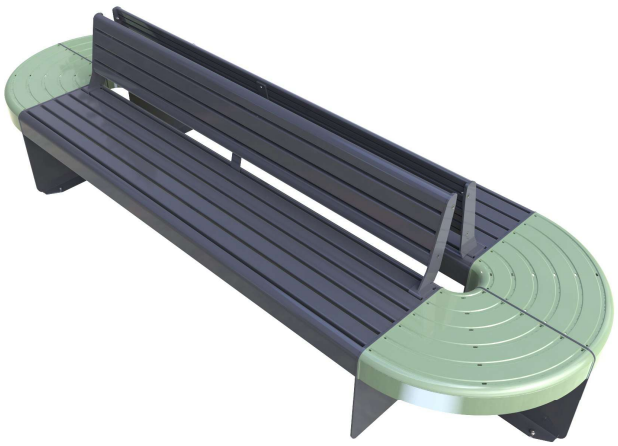

Back to back park seats with 180° joiners both ends

COPYRIGHT © THIS DRAWING IS THE PROPERTY OF GX OUTDOORS PTY LTD FOR WHICH WE RESERVE ALL RIGHTS INCLUDING THOSE RELATING TO PATENTS OR REGISTERED DESIGNS.

Modular Furniture Technical Datasheet

DATE: NOVEMBER 2026
REVISION: REV 4

PLATFORMS NO BACKREST

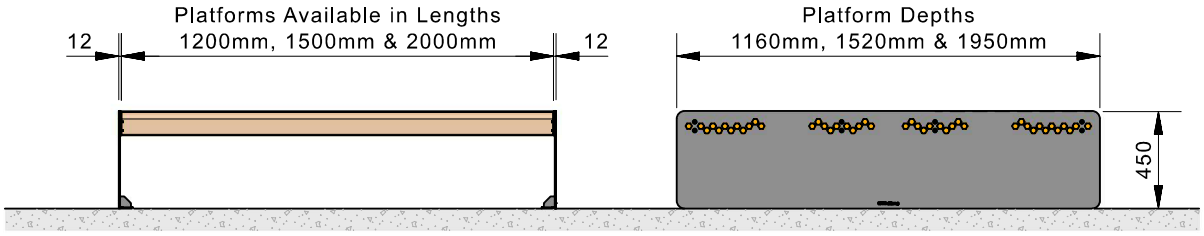

Platforms (No Backrest)

Platforms may have a partial or full-lenght backrest

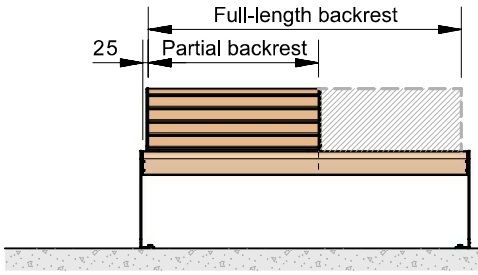

1500mm platform with centred backrest (only configuration)

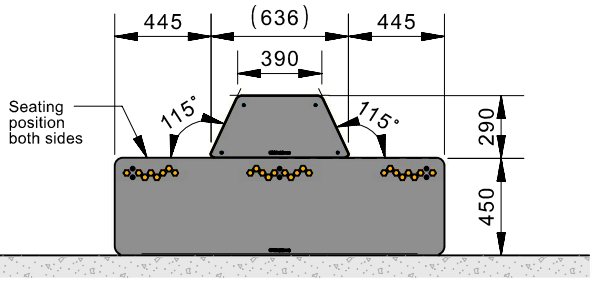

Backrest Length

Backrests can be partial or full length and can be positioned anywhere along the platform

Backrest Position

PLATFORMS WITH BACKREST

(1500mm & 2000mm deep only)

2000mm with centred backrest

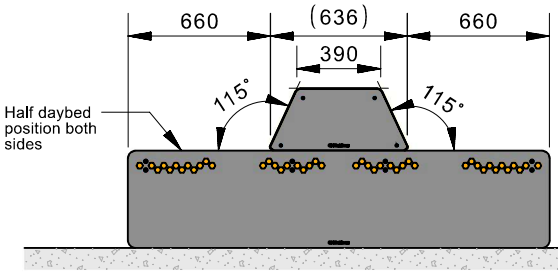

2000mm with offset backrest

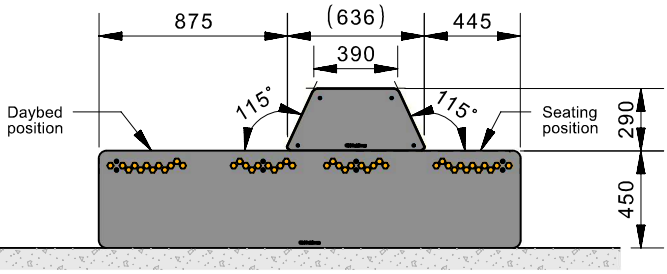

Backrest Position

2000mm deep platform - backrest can be centred or offset

Partial backrest on platform

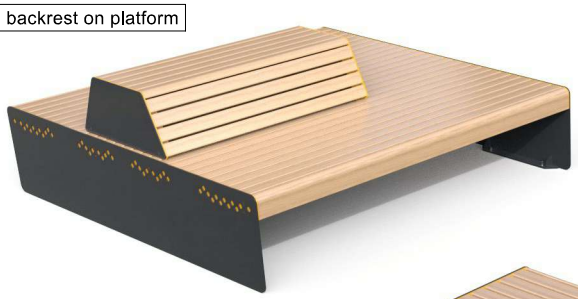

Platform Only



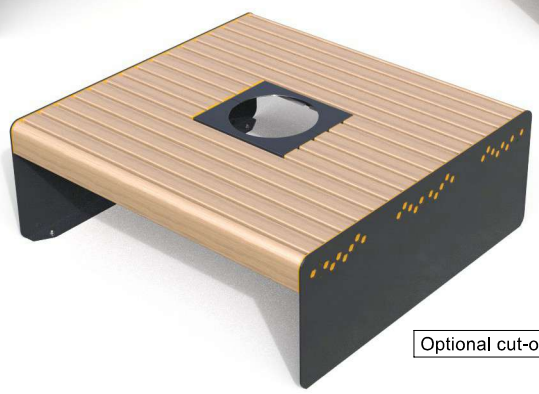

Optional cut-out in centre

COPYRIGHT © THIS DRAWING IS THE PROPERTY OF GX OUTDOORS PTY LTD FOR WHICH WE RESERVE ALL RIGHTS INCLUDING THOSE RELATING TO PATENTS OR REGISTERED DESIGNS.

Modular Furniture Technical Datasheet

DATE: NOVEMBER 2026
REVISION: REV 4

HYVE BY GX Outdoors

SINGLE-WIDTH GREENCELLS

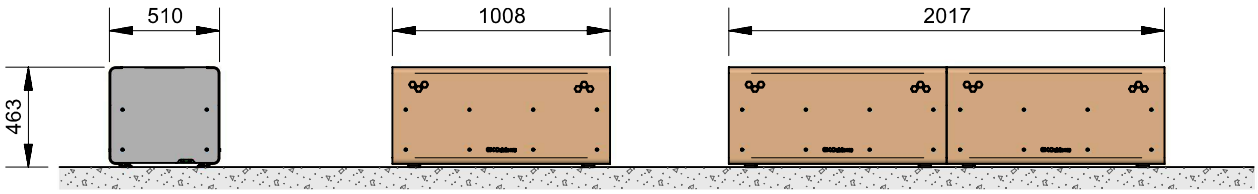

Typical single-width Greencell end profile

1000 x 500 (Single) Greencell

2000 x 500 (Double) Greencell

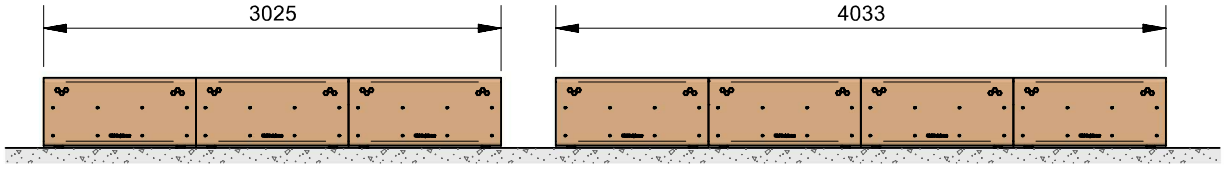

3000 x 500 (Triple) Greencell

4000 x 500 (Quad) Greencell

DOUBLE-WIDTH GREENCELL

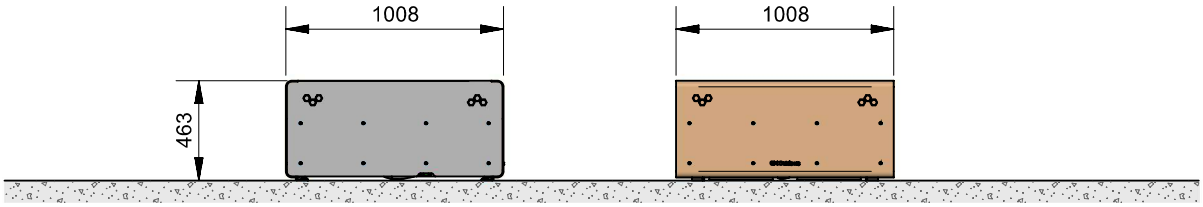

Typical double-width Greencell end profile

1000 x 1000 (Single) Greencell



Plants shown for reference only



Plants shown for reference only



- 300mm soil depth & wicking reservoir to keep your plants alive.
- The GX Outdoors GreenCell is supplied with Stainless Steel Anti-theft fixings
- The GX Outdoors Single width GreenCell has a plantable area of 890mm x 390mm.
- The GX Outdoors Double width GreenCell has a plantable area of 890mm x 890mm.
- The GX Outdoors GreenCell is 100% Australian Manufactured out of Powder Coated marine grade Aluminium
- Choice of over 50 Powder Coat colours
- Reservoir drainage system included

GX Outdoors Recommends;

- filling Single width GreenCell with 90L of potting mix*
- filling Double width GreenCell with 180L of potting mix*

*Potting Mix combined evenly with 25L of Perlite

HYVE GX Outdoors
gxoutdoors.com/hyve
1300 552 102

COPYRIGHT © THIS DRAWING IS THE PROPERTY OF GX OUTDOORS PTY LTD FOR WHICH WE RESERVE ALL RIGHTS INCLUDING THOSE RELATING TO PATENTS OR REGISTERED DESIGNS.